Carinya 375 x 75 x 5mm Galvanised Mending Plate Bracket

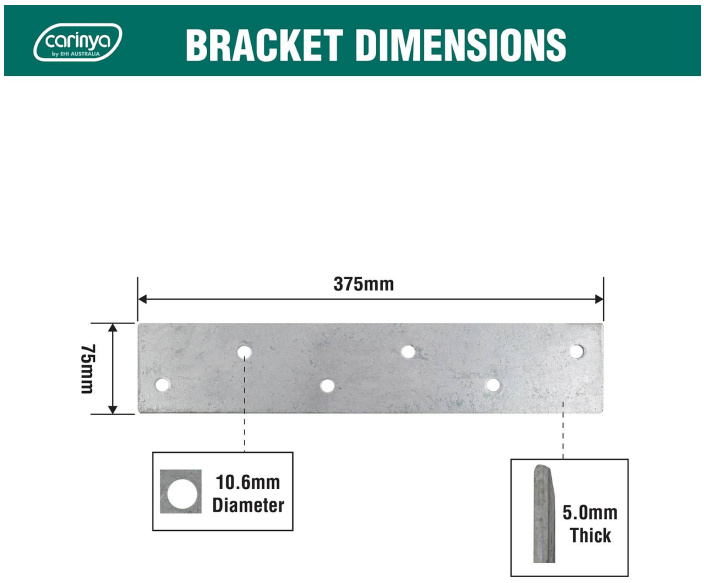

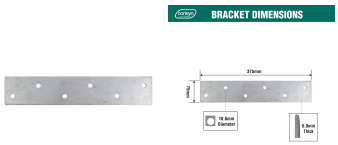

Description

Carinya 375 x 75 x 5mm Galvanised Mending Plate Bracket is designed for applications requiring secure joint reinforcement in building and repair tasks. Constructed from galvanised steel with a hot dipped galvanised finish, it provides consistent load support and effective structural integration. Its straightforward design optimises installation for trade professionals, ensuring dependable results when connecting plates for stability and durability in various technical applications.

Features

- Constructed from durable galvanised steel for long-lasting support
- Hot dipped galvanised finish protects against corrosion
- Precisely engineered mending plate brackets for reliable structural repair
- 375 x 75 x 5mm dimensions for accurate fitting measurements
- Robust construction ensures consistent performance in demanding applications
- Designed for secure mending plate bracket installation
- Compatible with various construction restoration techniques
- Backed by Carinya quality for dependable usage

Product Code: G3755

Dimensions

Product Length (mm)	375
Product Width (mm)	75
Product Height (mm)	5
Product Thickness (mm)	5
Diameter of Fixing Holes (mm)	10.6

Appearance

Product Colour	Hot Dipped Galvanised

Construction

Product Material 1	Galvanised Steel

Specifications

Outdoor Use	No
Indoor Use	Yes
Hardware Included	No

NSW/ACT Chris Caruana 0431 151 883 chris.c@ehi.com
QLD Stephen Duncan 0458 203 917 stephen.d@ehi.com.au
VIC/TAS/SA Trent Rapp 0412 444 133 trent.r@ehi.com.au
WA Greg Martin 0417 959 925 greg.m@ehi.com.au